DOR-O-MATIC®
7350 West Wilson Ave.
Harwood Heights, IL. 60706-4786
Phone: (800) 543-4635
Fax: (708) 867-0291
www.doromatic.com

96K SERIES

SINGLE SLIDING DOOR
SURFACE APPLIED
NARROW STILE
WITH THRESHOLD

P-SX AND SX-P

89510REVA
OCTOBER 16, 2002 ECN 00921

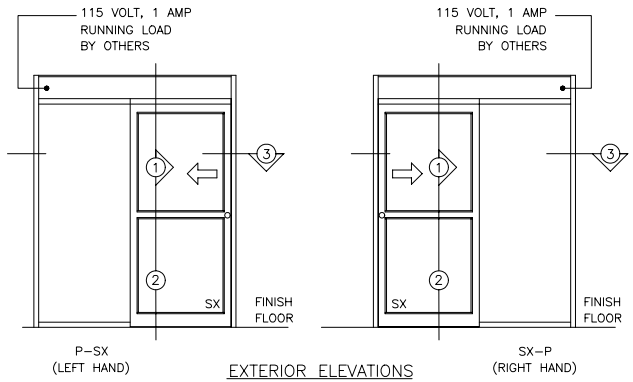

EXTERIOR ELEVATIONS

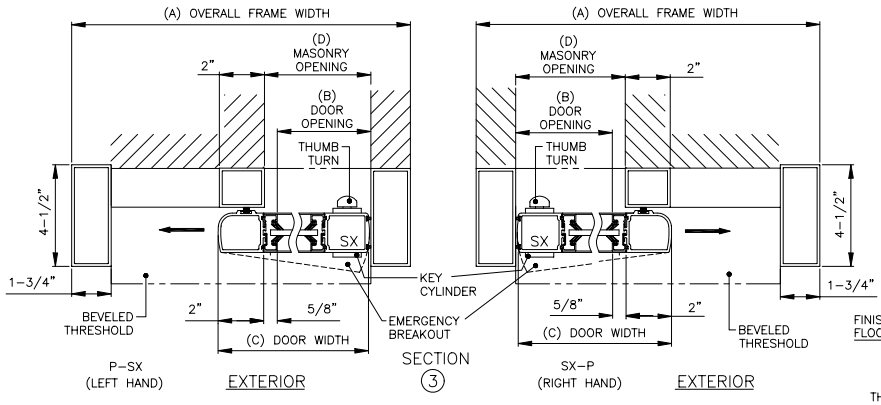

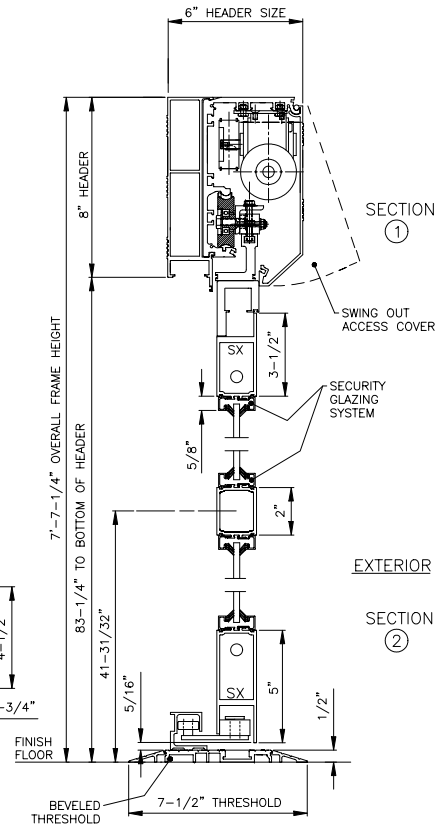

NOTE:

STANDARD PACKAGE:
OPERATOR, NARROW STILE DOOR, FRAMES, 2" MUNTINS, WEATHERSTRIPPING, EMERGENCY BREAKOUT ON "SX" DOOR ONLY, STANDARD LOCK CYLINDER WITH THUMBTURN, 4-POSITION SWITCH, 2-POSITION KEYSWITCH, MOTION SENSOR, PRESENCE SENSOR, DOOR HOLDING BEAMS, ANTI-JAR WHEELS, 1/4" GLAZING SYSTEM, AND ONE PIECE 1/2" X 7-1/2" THRESHOLD - JAMB TO JAMB.

STANDARD FINISH:
CLEAR ANODIZED - US28
DARK BRONZE ANODIZED - DC13
SPECIAL COLORS ARE AVAILABLE.

* MAX. GLASS THICKNESS IS 1".
  (GLASS STOP HEIGHT - 1-1/8")

* ALL WRITTEN DIMENSIONS ARE TO TAKE PREFERENCE OVER SCALED DIMENSIONS.

* SIZES NOT LISTED BELOW - CONSULT WITH FACTORY.

* ALL ANSI DECALS ARE PROVIDED.

OVERALL FRAME WIDTH (A)	DOOR OPENING WIDTH (B)	DOOR WIDTH (C)	MASONRY OPENING (D)
7'-0" (MIN.)	36"	41-1/8"	39-1/8"
8'-0"	42"	47-1/8"	45-1/8"
8'-6"	44"	50-1/8"	48-1/8"
9'-0" (MAX.)	48"	53-1/8"	51-1/8"