DOR-O-MATIC®
7350 West Wilson Ave.
Harwood Heights, IL. 60706-4786
Phone: (800) 543-4635
Fax: (708) 867-0291
www.doromatic.com

96K ALL GLASS

SINGLE SLIDING DOORS
ALL GLASS
FIXED SIDELITE
WITH THRESHOLD

O-SX AND SX-O

89594REVD
OCTOBER 17, 2002
ECN 00921

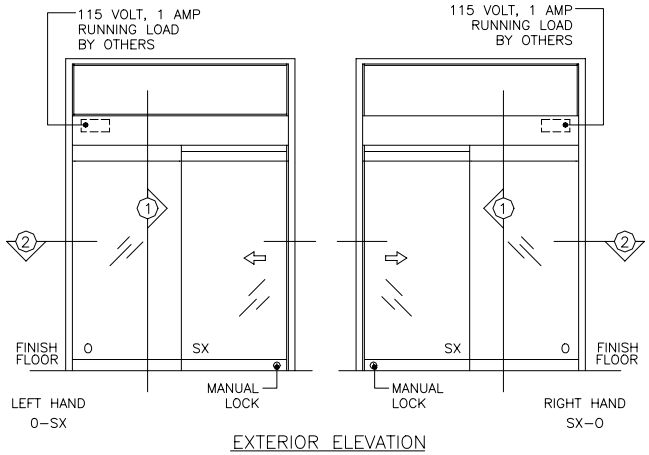

EXTERIOR ELEVATION

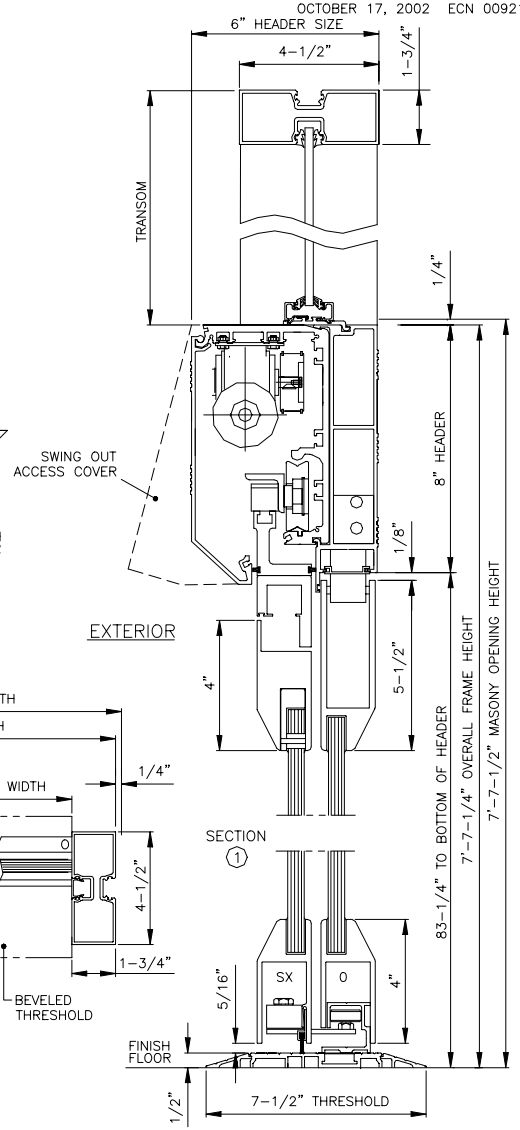

EXTERIOR

SECTION 1

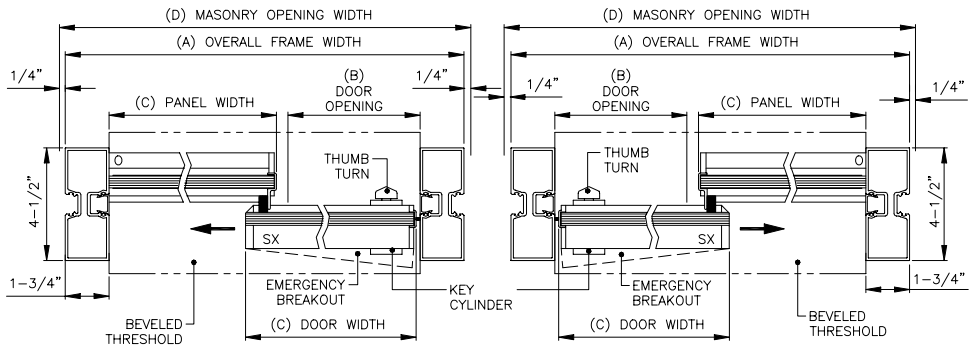

LEFT HAND
O-SX

EXTERIOR

SECTION 2

RIGHT HAND
SX-O

NOTE:

STANDARD PACKAGE:
OPERATOR, FRAMES, DOOR AND PANEL CHANNELS FOR 1/2" GLASS, ALL DOOR AND PANEL HARDWARE, CLEAR VINYL FOR OVERLAP OF DOOR AND PANEL, EMERGENCY BREAKOUT ON "SX" DOORS, ENERGYWISE SWITCH, 4-POSITION KEYSWITCH, THUMBTURN AND KEY CYLINDER, MOTION SENSOR, PRESENCE SENSOR, DOOR HOLDING BEAMS, ANTI-JAR WHEELS, AND ONE PIECE 1/2" X 7-1/2" THRESHOLD - JAMB TO JAMB.

STANDARD FINISH:
CLEAR ANODIZED - US28
DARK BRONZE ANODIZED - DC13
SPECIAL COLORS ARE AVAILABLE.

* TRANSOM OPTIONAL - MAX. HEIGHT 6'-0" TOP OF HEADER TO TOP OF TRANSOM. CONSULT FACTORY FOR LARGER SIZES.
* TRANSOM FLUSH GLAZING OTHER THAN 1/4" GLASS HAS SURFACE APPLIED GLASS STOPS.
* DOOR AND PANEL GLASS THICKNESS IS 1/2" GLASS SUPPLIED BY OTHERS.
* MANUAL LOCKS WITH THUMB TURN AND KEY CYLINDERS ARE STANDARD.
* ALL WRITTEN DIMENSIONS ARE TO TAKE PREFERENCE OVER SCALED DIMENSIONS.
* SIZES NOT LISTED BELOW - CONSULT WITH FACTORY.
* ALL ANSI DECALS ARE PROVIDED.

OVERALL FRAME WIDTH (A)	DOOR OPENING (B)	DOOR/PANEL WIDTH (C)	MASONRY OPENING WIDTH (D)
7'-0" (MIN.)	36"	41-1/8"	7'-0 1/2"
7'-1-1/2" (MAX.)	36"	42"	7'-2"