DOR-O-MATIC®
7350 West Wilson Ave.
Harwood Heights, IL. 60706-4786
Phone: (800) 543-4635
Fax: (708) 867-0291
www.doromatic.com

SLIMLINE–ICU

SINGLE SLIDING DOOR
FULL BREAKOUT
WITH POSITIVE LATCH
TRACKLESS DOOR OPENING
(FLOOR TRACK UNDER PANEL)

SX–SO AND SO–SX

89682REV0
OCT. 10, 2002

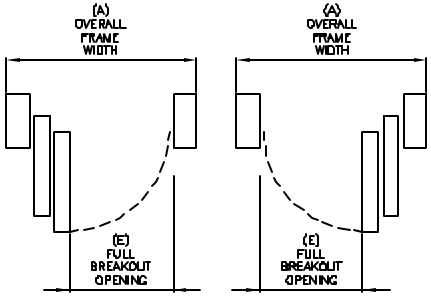

BREAKOUT DETAIL

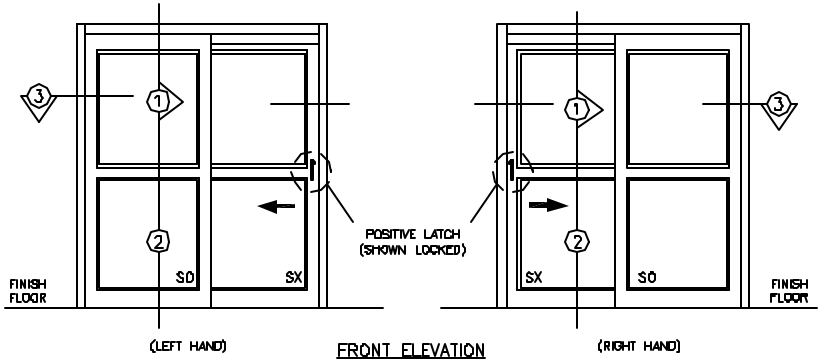

FRONT ELEVATION

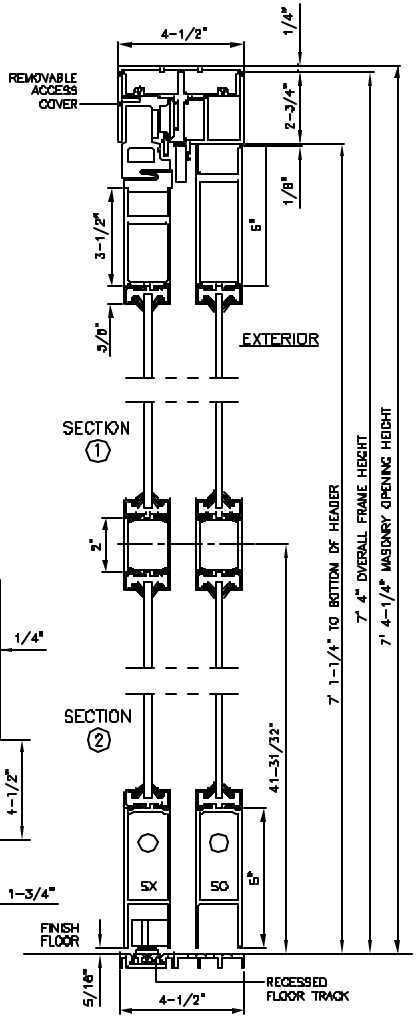

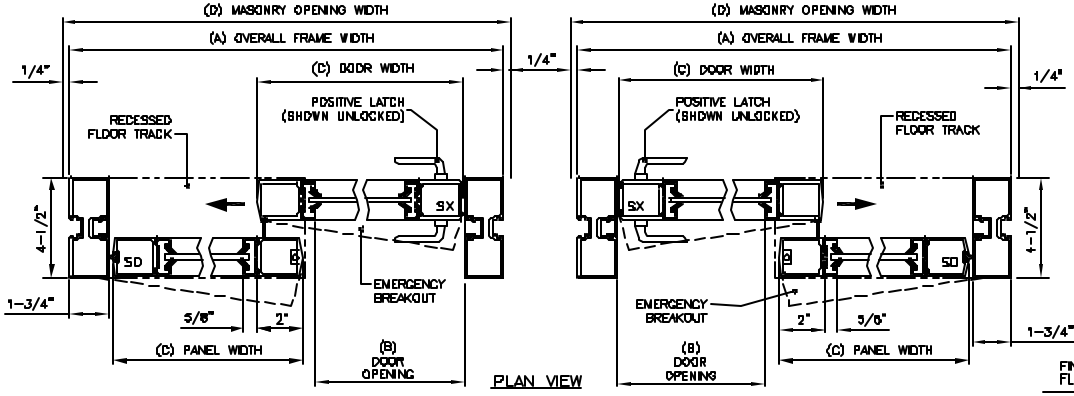

PLAN VIEW

SO–SX
(LEFT HAND)

SECTION
3

SX–SO
(RIGHT HAND)

NOTES:

STANDARD PACKAGE:
BALL DETENTS ON SX DOORS AND SO PANELS, HEADER 2-3/4" X 4-1/2", FRAMES, NARROW STILE SLIDING DOOR AND SIDELITES, 2" MUNTINS, 8" BOTTOM RAILS, POSITIVE LATCH HANDLES ON EXTERIOR AND INTERIOR, 1/4" GLAZING SYSTEM, AND 1/2" X 4-1/2" RECESSED FLOOR TRACK IN PANEL AREA.

STANDARD FINISH:
CLEAR ANODIZED – U828
DARK BRONZE ANODIZED – DC13
SPECIAL COLORS ARE AVAILABLE

* FULL BREAKOUT AT ANY POSITION.
* MAX. GLASS THICKNESS IS 1/4".
* ALL WRITTEN DIMENSIONS ARE TO TAKE PREFERENCE OVER SCALED DIMENSIONS.
* SPECIAL SIZES – CONSULT WITH FACTORY.

OVERALL FRAME WIDTH (A)	DOOR OPENING WIDTH (B)	DOOR WIDTH (C)	MASONRY OPENING (D)	FULL BREAKOUT OPENING (E)
7' 0"	38-1/8"	41-1/8"	7' 1/2"	74-1/2"
8' 0"	42-1/8"	47-1/8"	8' 1/2"	86-1/2"
9' 0"	48-1/8"	53-1/8"	9' 1/2"	98-1/2"